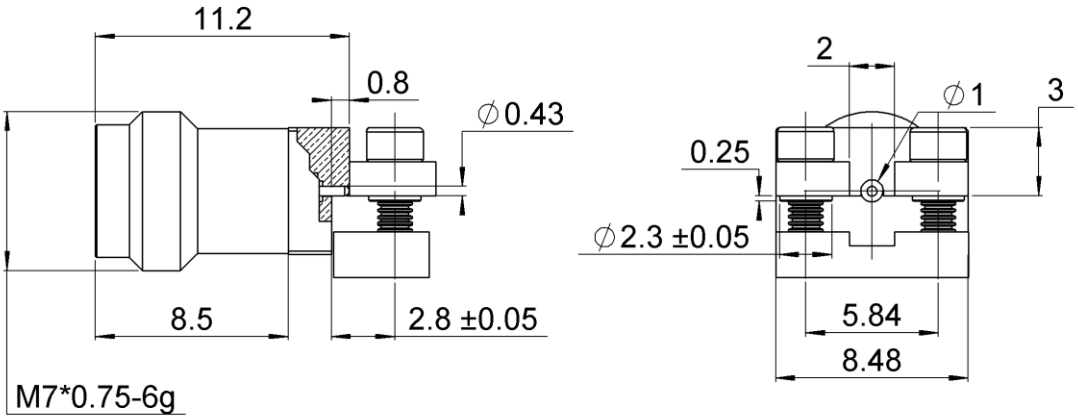

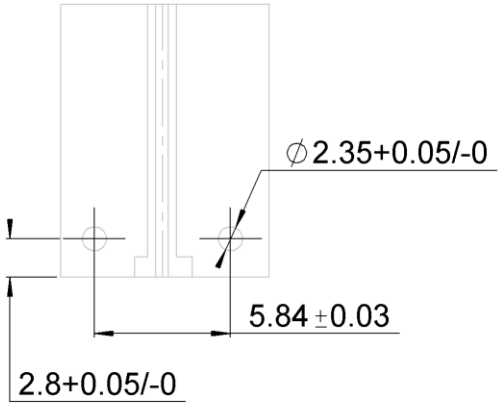

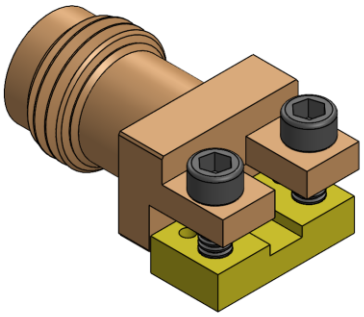

GENERAL PCB LAYOUT

All dimensions are in mm.

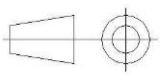

COMPONENTS	MATERIALS	PLATING (µm)
Body	Copper	GOLD OVER NICKEL
Center contact	BERYLLIUM COPPER	GOLD OVER NICKEL
Insulator	PTFE OR PEI	
Screw	SUS303	
Gasket	Copper	GOLD OVER NICKEL
-	-	-
-	-	-

This document contains proprietary information and such information shall not be disclosed to any third party for any purpose whatsoever or used for manufacturing purposes without prior written agreement from PURE. The data defined in this document are given as an indication, in the effort to improve our products; we reserve the right to make any changes judged necessary.

PACKAGING

Standard	Unit	Other
1	**Contact us**	**Contact us**

ELECTRICAL CHARACTERISTICS

Impedance			**50**	Ω
Frequency			**0-45**	GHz
VSWR	**1.08***	**+**	**0.08**	x F(GHz) Maxi
Insertion loss			**0.35***	√F(GHz) dB Maxi
RF leakage			**-90**	- F(GHz)) dB Maxi
Voltage rating			**500**	Veff Maxi
Dielectric withstanding voltage			**700**	Veff mini
Insulation resistance			**5000**	MΩ mini

MECHANICAL CHARACTERISTICS

Center contact retention		
Axial force – Mating End	**12**	N mini
Recommended torque		
Mating	**1.1**	N.cm mini
	0	N.cm
	0	N.cm
Mating life	**500**	Cycles mini
Weight	**3.5**	g

ENVIRONMENTAL

Operating	**-65/+165**	°C
Hermetic seal	**NA**	Atm.cm3/s
Panel leakage	**NA**	

SPECIFICATION

OTHER CHARACTERISTICS

***Coaxial Transmission Line only.**

.

This document contains proprietary information and such information shall not be disclosed to any third party for any purpose whatsoever or used for manufacturing purposes without prior written agreement from PURE. The data defined in this document are given as an indication, in the effort to improve our products; we reserve the right to make any changes judged necessary.